ATMOR
Hot Water On Demand

SPARE PARTS EXPLODED VIEW
INSTANTANEOUS ELECTRIC WATER HEATERS
Model
ATMOR SELECT

R8219148-01 - 10/10/2023

EN	FR	IT	ES	DE	NL

ATMOR SELECT

Instantaneous Electric Water Heaters

Col	Reference	Model type	Begin	End
1	3195641	ATMOR SELECT 5KW	10-2023	-
1	3520253	ATMOR SELECT 5KW	09-2022	-
2	3195644	ATMOR SELECT 5KW BLACK	10-2023	-
2	3520256	ATMOR SELECT 5KW BLACK	09-2022	-
3	3195642	ATMOR SELECT 7KW	10-2023	-
3	3520254	ATMOR SELECT 7KW	09-2022	-
4	3195643	ATMOR SELECT 12KW TR	10-2023	-
4	3520255	ATMOR SELECT 12KW TR	09-2022	-

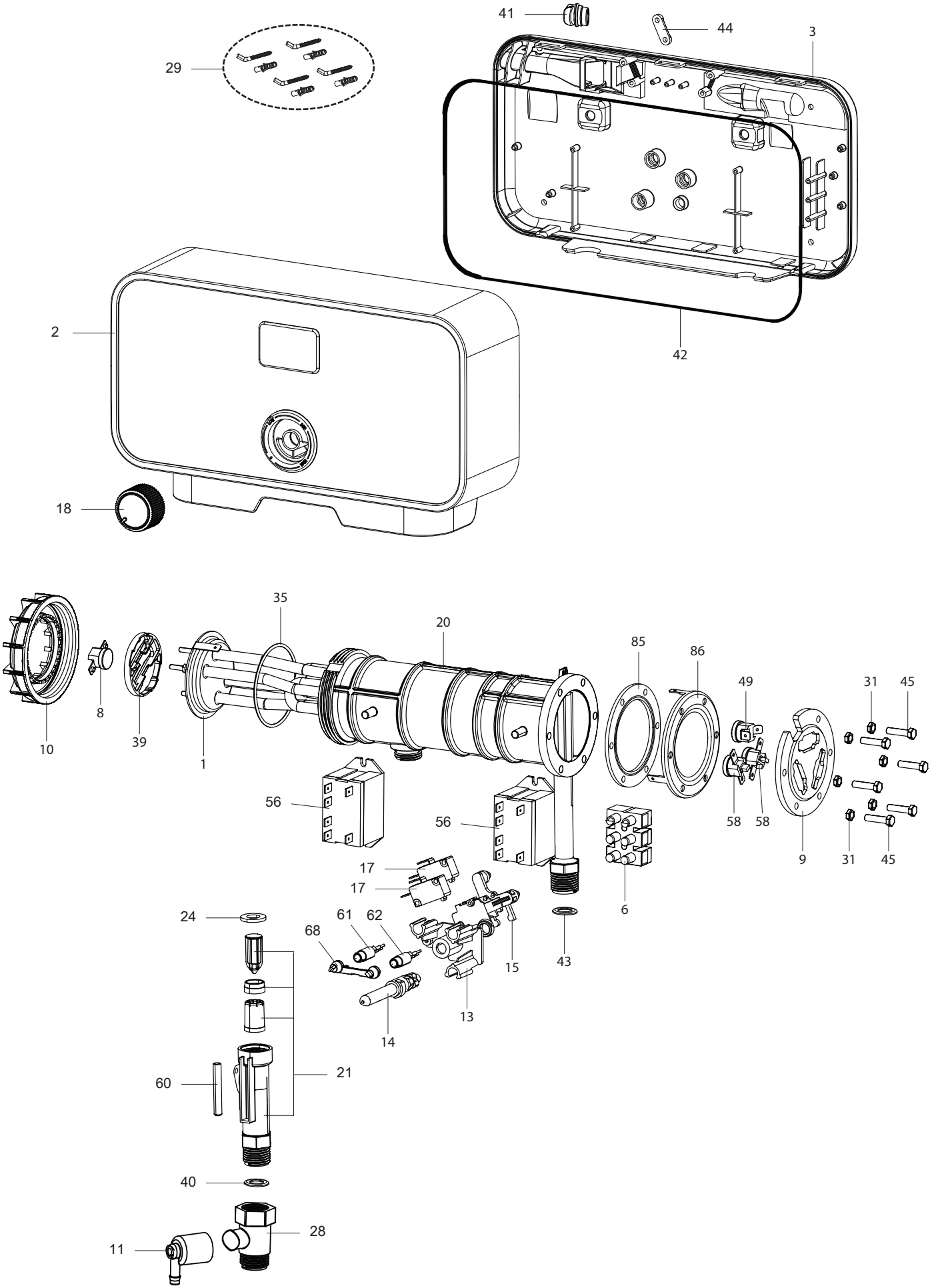
41
44
3
29
2
42
18
35
20
85
86
49
31
45
8
10
39
1
56
56
58
58
9
31
45
17
17
6
24
61
62
68
15
43
13
14
21
60
40
28
11

	Description	Manf. Pt. N	Type	ATMOR SELECT 5KW	A. SELECT 5KW(BLA.)	ATMOR SELECT 7KW	ATMOR SELECT 12KW	5	6	7	8	9	10	11	12	13	14	15	16	17	18	From	to
0001	HEATING ELEMENT 12KW 230V	65191371					●																
	HEATING ELEMENT 5KW 220V	65180270		●	●																		
	HEATING ELEMENT 8.5KW 240V	6500578100				●																	
0002	FRONT COVER	6500577800		●		●	●																
	FRONT COVER	6500578000			●																		
0003	BACK COVER	65118348		●		●	●																
	BACK COVER	65191470			●																		
0006	3-POLE TERMINAL BLOCK	65191382		●	●	●																	
	TERMINAL BLOCK	65191166					●																
0008	THERMOSTAT	65191087		●	●																		
0009	THERMOSTAT SUPPORT	65191132				●	●																
0010	BIG NUT FOR HEATING ELEMENT LOCK	65191119		●	●	●	●																
0011	PIPE CONNECTION	65191092		●	●	●	●																
0013	LED HOLDER	65191468		●	●	●	●																
0014	SPINDLE (KNOB)	65191070		●	●	●	●																
0015	SPINDLE HOLDER	65191071		●	●	●	●																
0017	MICROSWITCH (KNOB SELECTOR)	65191105		●	●	●	●																
0018	KNOB (REGULATION)	65191363			●																		
	KNOB (REGULATION)	65191385		●		●	●																
0020	CANISTER	65191120		●	●																		
	CANISTER	65191133				●	●																
0021	INLET PIPE ASSEMBLY	65191368		●	●																		
	INLET PIPE ASSEMBLY	65191370				●	●																
0024	INLET PIPE GASKET	65191100		●	●	●	●																
0028	SAFETY VALVE for 5.5 kw	65191126		●	●	●	●																
0029	INSTALLATION KIT	65191079		●	●	●	●																
0031	NUT M5	65191367				●	●																
0035	O-RING	65191095		●	●	●	●																
0039	THERMOSTAT SUPPORT	65191091		●	●																		
0040	TUBE RING (BLUE)	65191076		●	●	●	●																
0041	CABLE BUSHING	65191077		●	●	●	●																
0042	COVER GASKET	65191078		●	●	●	●																
0043	TUBE RING (RED)	65191097		●	●	●	●																
0044	CABLE CLAMP	65191069		●	●	●	●																
0045	BOLT M5X20	65191366				●	●																
0049	THERMOSTAT 57C	65191130				●																	
0056	RELAY	65191313		●	●	●	●																
0058	THERMOSTAT 85C	65191131				●	●																
0060	REED SENSOR (COMPLETE)	65191125		●	●	●	●																
0061	SIGNAL LAMP (BLACK/PURPLE)	65191375				●	●																
	SIGNAL LAMP (KIT)	6500577900		●	●																		
0062	SIGNAL LAMP (BLUE/BROWN)	65191374				●	●																
0068	LIGHT GUIDE	65191362		●	●	●	●																
0085	FLANGE GASKET	65191134				●	●																
0086	CANISTER FLANGE	65191135				●	●																

LIST OF THE ABBREVIATIONS

HW	: Hot water.
CW	: Cold water.
C	: Ceramic resistance (normal heating).
Ca	: Ceramic resistance (accelerated heating)
TP	: Immersion heater.
1F	: With fittings.
2F	: Without fittings.
3F	: With fittings and another outlet connection.
AMI	: With mixing valve.
SMI	: Without mixing valve.
PUISS	: Power of th appliance.
PN	: Appliance with normal pression.
LP	: Appliance with low pression.
PV	: Appliance with variable power.
PF	: Appliance with fixed power.

IDENTIFICATION PLATE

SERIAL NUMBER

6 Characters : 03 09 08
- Year of manufacture
- Manufacturing day
- Month of manufacture

9 Characters : 5 9 12 0606
- Year of manufacture
- Month of manufacture
- Sequencial number

14 Characters : SI-V-0B0 45 07 0001
- Sequencial number
- Year of manufacture : 6 → 2004, 7 → 2005, 8 → 2006, etc ...
- Month of manufacture : 25 → January, 13 → February, 32 → March, 35 → April, 39 → May, 45 → June, 43 → July, 29 → August, 40 → September, 38 → October, 51 → November, 12 → December
- Product model

14 Characters : 111518 XX 000010
- Month of manufacture
- Day of manufacture
- Sequencial number
- Year of manufacture

15 Characters : 02 11 00001 007843
- Year of manufacture
- Month of manufacture
- Product reference
- Sequencial number

21 Characters : 3200050 XX 08115 0000001
- Product reference
- Sequencial number
- Year (08) / Manufacturing day (115)

22 Characters : 3200050 XX 070115 0000001
- Product reference
- Sequencial number
- Year (07) / Month (01) / Manufacturing day (15)

The indications mentionned on the prices, commercial or technical literature and the scheme are written for your guidance and are available at a given time. The CONSTRUCTOR retains the power to modify the presentation, the form, the size, the conception or the material of the products.